BEAM MOTION

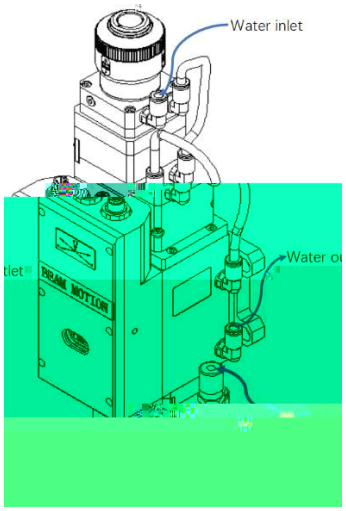
Water inlet
Water ou
tlet
BEAM MOTION

ⓘ

ⓘ

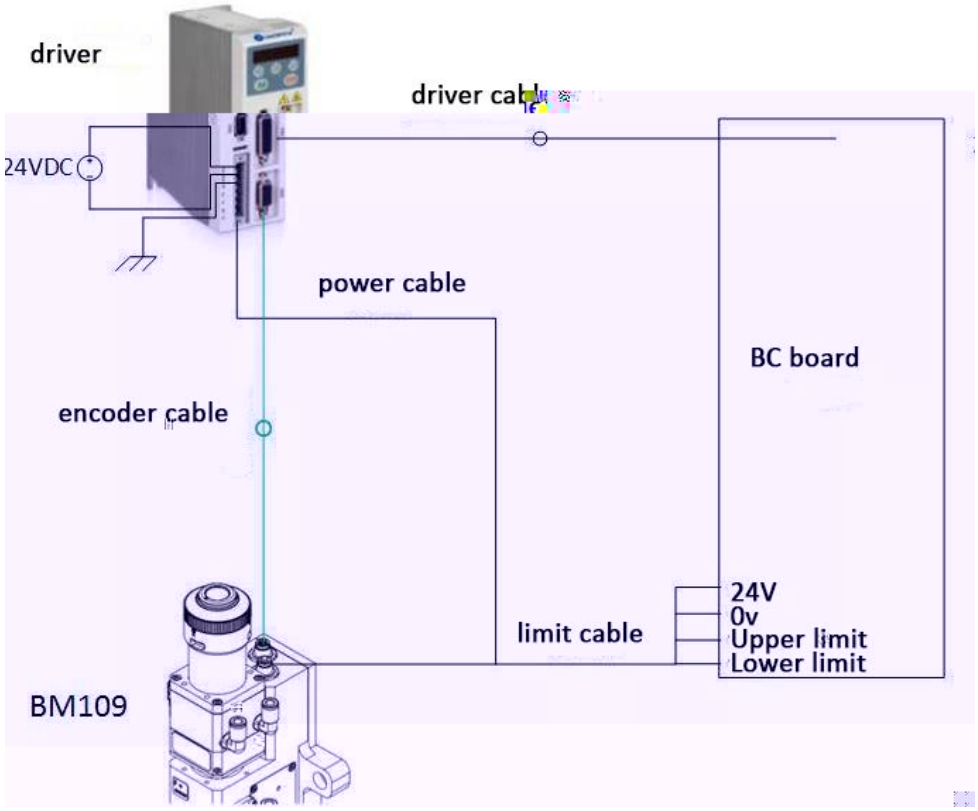
driver
driver cable
24VDC
power cable
BC board
encoder cable
24V
0v
Upper limit
Lower limit
limit cable
BM109

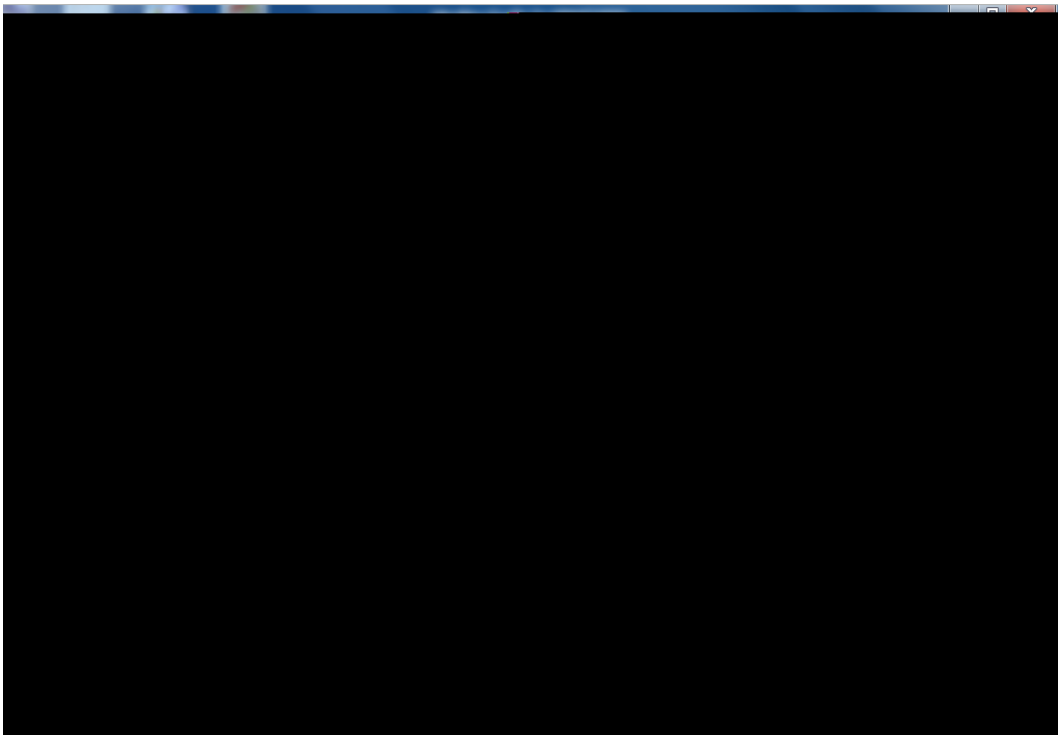

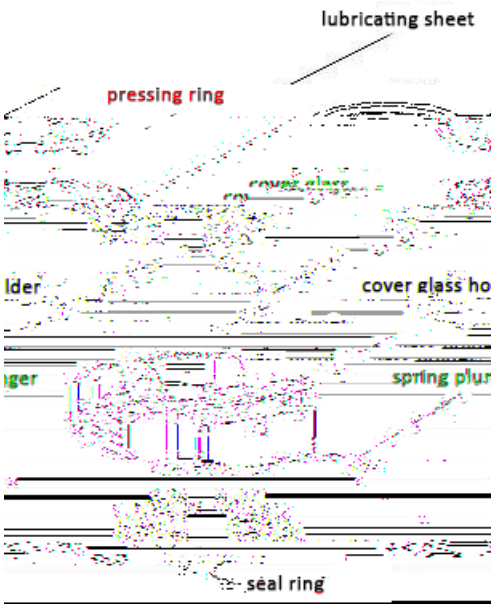
lubricating sheet
pressing ring
cover glass ho
spring plu
seal ring

Collimation Length	QBH-100mm	QBH-75mm
	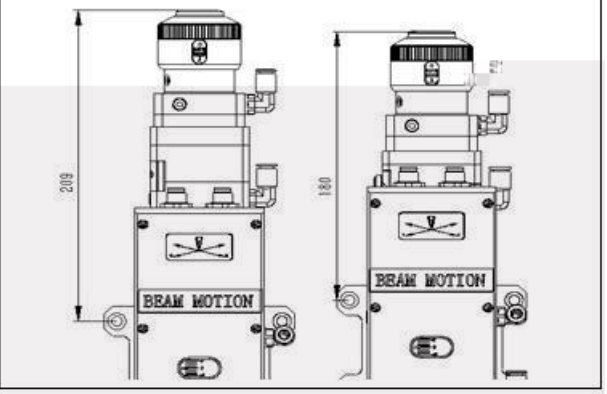	

	125mm.FL	155mm.FL	200mm.FL

YT LS